UNIVERSITY OF BRADFORD
MAKING KNOWLEDGE WORK™

Science Bridges China
www.sciencebridgeschina.com
中英科技桥
GLOBAL ENGAGEMENTS

UK-CHINA amri
Advanced Materials Research Institute

Science Bridges China Research Profile

Name: **Hadj Benkreira**
Position: **Professor**
Institute/division: **School of Engineering, Design & Technology, University of Bradford**
Email: **h.benkreira@bradford.ac.uk**
Tel: **(00) 44 1274 233721**

SUMMARY OF MY RELEVANT RESEARCH AREAS:

Polymer & Soft Solid Processing, Coating Science & Technology, Rheology

聚合物和软固体加工，涂料科学与技术，流变学

Primary Research interests:

Professor Benkreira leads with Professor Coates (FEng), the Advanced Materials Engineering Research Group at Bradford which includes Polymer Engineering. Bradford is the home of the engineering part of the IRC in polymer Science and Technology and is equipped with the most advanced experimental and computer modelling facilities. Some 30 researchers supported by EPSRC, DTI and 45 collaborating companies are presently involved in research in polymer rheology, process measurements, analysis and control, new process development and computer modelling of polymer processing operations and thin film coating science and technology.

His current research includes:

- Multilayer Curtain and Slide Thin Film Coating
- Dynamic Wetting under Vacuum
- The Control of Extrudate Instability using the Novel Extrusion Rotating Roller Die developed at Bradford: *see illustration on next page*
- Development of New Nanocomposites using the Novel Mini-Mixer developed at Bradford: i*llustration on next page*
- Structure Design of Acoustics and Thermal Materials in Cold Extrusion using Plastic Wastes
- The Rheology & Start-up Pressure of Waxy Crude Oils
- Rheology of Polymer Melts, Coatings & Biological Fluids

Professor Benkreira (FIChemE), trained in Chemical Engineering research at Bradford under the supervision of W.L.Wilkinson (FRS), is a member of the UK EPSRC Peer Review College (Materials) and holds a Personal Chair in Coating and Polymer Processing at the University of Bradford. He is currently the Associate Dean for Research & Knowledge Transfer of the School of Engineering, Design & Technology. Professor Benkreira has been the principal investigator of over 20 EPSRC research awards since 1980 and has published over 100 papers in learned journals and conferences in the area of coating flows, viscous mixing and polymer processing. He is Vice President of the International Society of Coating Science & Technology and co-founder of the European Coating Group

Topics in which you would like to develop collaborative research:

Polymer rheology, nanocomposites, recycling of materials

Relevant existing collaborations (academic/clinical/commercial) inside or outside China.

Relevant graphics, figures, pictures:

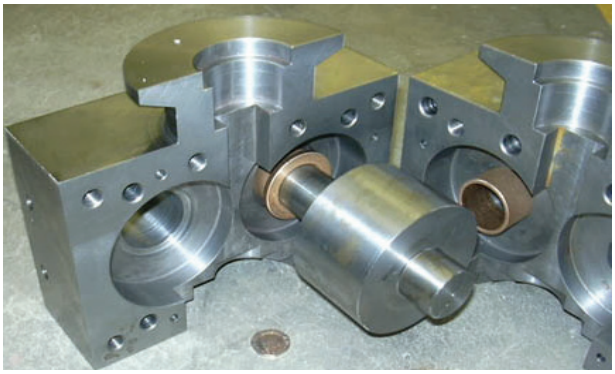

Observe how an increase in roller speeds stabilise extrudate. For principles see: Benkreira et al, *International Polymer Processing, 2004, 19(2), 111-117*

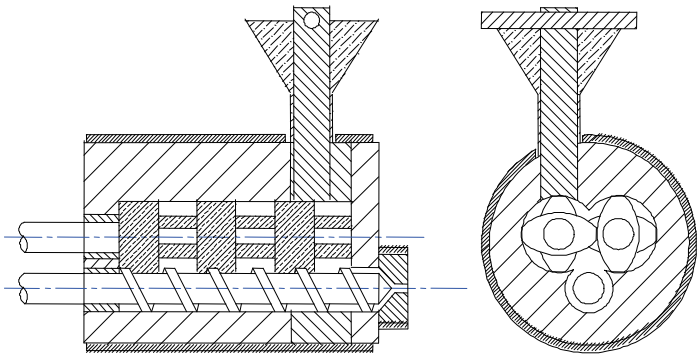

The 3-screw design (19mm) & rotation enables infinite control of circulation, hence mixing time. Barrel & Length size: 80 mm and 100mm. For principles see: Plastics, Rubber and Composites: Macromolecular Engineering, 2008

Publications and other outputs relevant to your interest in this programme

- Benkreira et al, International Polymer Processing, *2004, 19(2), 111-117*
- Benkreira et al, Plastics, Rubber and Composites: Macromolecular Engineering, 2008
- H Benkreira, A. Khan, K.V. Horoshenkov Sustainable acoustic and thermal insulation materials from elastomeric waste residues Chemical Engineering Science, Volume 66, Issue 18, 7 June 2011, Pages 4157-417, 66, 4157-4171 DOI: 10.1016/j.ces.2011.05.047, June2011
- H Benkreira, J.B. Ikin, Dissolution and growth of entrained bubbles when dip coating in a gas under reduced pressure, Chemical Engineering Science, Volume 65, Issue 22, 15 November 2010, Pages 5821-5829, 65, 5821-5829, DOI:10.1016/j.ces.2011.05.047 Nov 2010
- HBenkreira, J.B. Ikin , Dynamic wetting and gas viscosity effects Chemical Engineering Science, Volume 65, Issue 5, 1 March 2010, Pages 1790-1796 65, 1790-1796, DOI: 10.1016/j.ces.2009.11.019 Mar.2010
- H Benkreira, M.I. Khan Air entrainment in dip coating under reduced air pressures, Chemical Engineering Science, Volume 63, Issue 2, January 2008, Pages 448-459, 63, 448-459, DOI:10.1016/j.ces.2007.09.045, Jan.2008